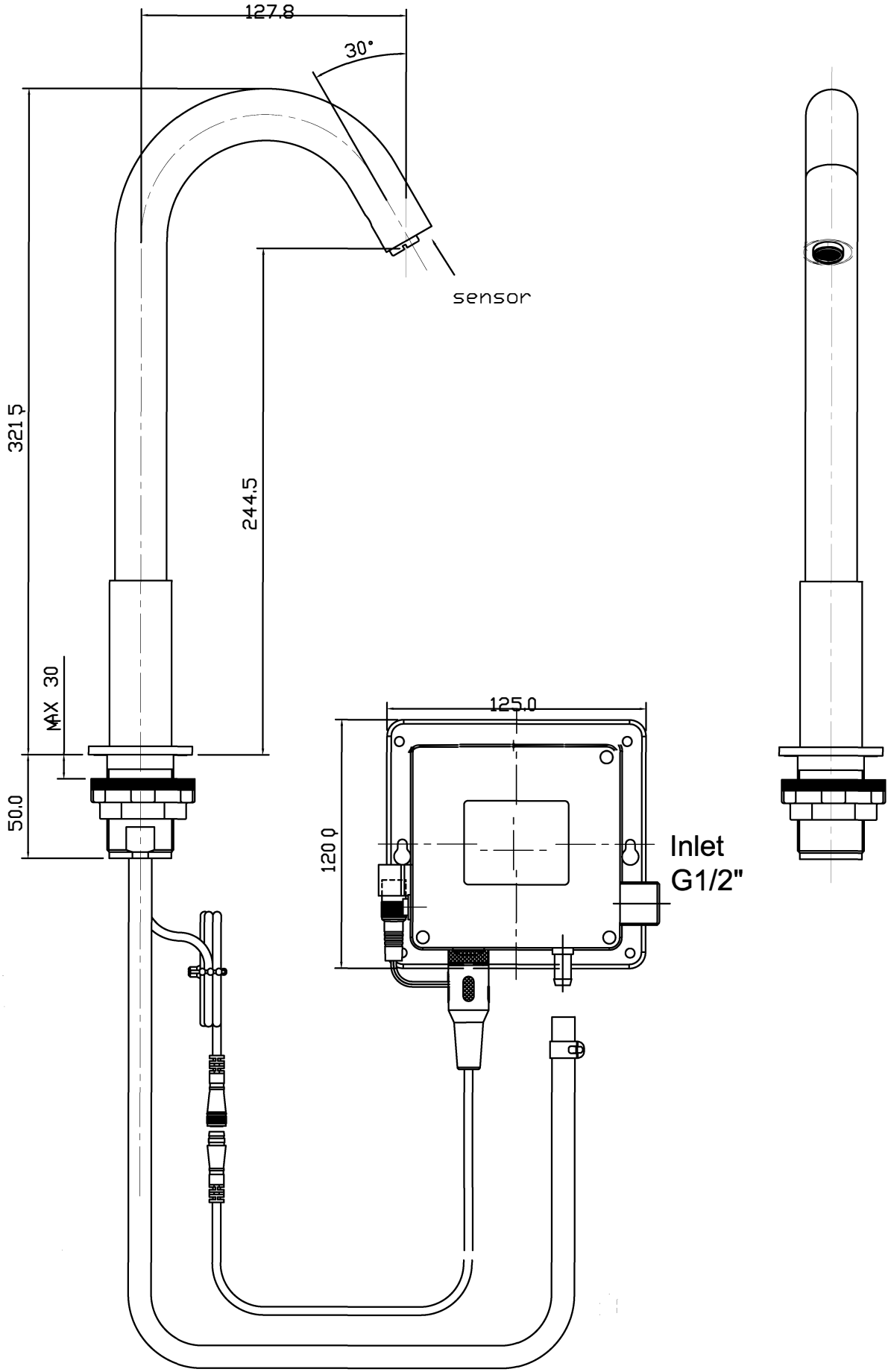
127.8
30°
sensor
321.5
244.5
MAX 30
50.0
125.0
120.0
Inlet
G1/2"